IOWA STATE UNIVERSITY
Digital Repository

Agricultural and Biosystems Engineering Publications

Agricultural and Biosystems Engineering

2006

Quality Assured Measurements of Animal Building Emissions: Gas Concentrations

Albert J. Heber
Purdue University

JiQin Ni
Purdue University

Teng T. Lim
Purdue University

Pei-Chun Tao
Purdue University

Amy M. Millmier
University of Missouri

See next page for additional authors

Follow this and additional works at: https://lib.dr.iastate.edu/abe_eng_pubs

Part of the Agriculture Commons, Animal Sciences Commons, Bioresource and Agricultural Engineering Commons, and the Environmental Sciences Commons

The complete bibliographic information for this item can be found at https://lib.dr.iastate.edu/abe_eng_pubs/924. For information on how to cite this item, please visit http://lib.dr.iastate.edu/howtocite.html.

This Article is brought to you for free and open access by the Agricultural and Biosystems Engineering at Iowa State University Digital Repository. It has been accepted for inclusion in Agricultural and Biosystems Engineering Publications by an authorized administrator of Iowa State University Digital Repository. For more information, please contact digirep@iastate.edu.

Quality Assured Measurements of Animal Building Emissions: Gas Concentrations

Abstract

Comprehensive field studies were initiated in 2002 to measure emissions of ammonia (NH3), hydrogen sulfide (H2S), carbon dioxide (CO2), methane (CH4), nonmethane hydrocarbons (NMHC), particulate matter <10 >μm in diameter, and total suspended particulate from swine and poultry production buildings in the United States.

This paper focuses on the quasicontinuous gas concentration measurement at multiple locations among paired barns in seven states. Documented principles, used in air pollution monitoring at industrial sources, were applied in developing quality assurance (QA) project plans for these studies. Air was sampled from multiple locations with each gas analyzed with one high quality commercial gas analyzer that was located in an environmentally controlled on-farm instrument shelter. A nominal 4 L/min gas sampling system was designed and constructed with Teflon wetted surfaces, bypass pumping, and sample line flow and pressure sensors. Three-way solenoids were used to automatically switch between multiple gas sampling lines with ≥10 min sampling intervals. Inside and outside gas sampling probes were between 10 and 115 m away from the analyzers. Analyzers used chemiluminescence, fluorescence,photoacoustic infrared, and photoionization detectors for NH3, H2S, CO2, CH4, and NMHC, respectively. Data were collected using personal computer-based data acquisition hardware and software. This paper discusses the methodology of gas concentration measurements and the unique challenges that livestock barns pose for achieving desired accuracy and precision, data representativeness, comparability and completeness, and instrument calibration and maintenance.

Keywords

Sampling, ammonia, hydrogen sulfide, volatile organic compounds, methane, quality control, animal housing, multi-state, continuous emission monitoring, emission factors

Disciplines

Agriculture | Animal Sciences | Bioresource and Agricultural Engineering | Environmental Sciences

Comments

This is an Accepted Manuscript of an article published by Taylor & Francis as Heber, Albert J., Ji-Qin Ni, Teng T. Lim, Pei-Chun Tao, Amy M. Schmidt, Jacek A. Koziel, David B. Beasley et al. "Quality assured measurements of animal building emissions: Gas concentrations." *Journal of the Air & Waste Management Association* 56, no. 10 (2006): 1472-1483. DOI: 10.1080/10473289.2006.10465680. Posted with permission.

Authors

Albert J. Heber, JiQin Ni, Teng T. Lim, Pei-Chun Tao, Amy M. Millmier, Jacek A. Koziel, David B. Beasley, Steven J. Hoff, Richard E. Nicolai, Larry D. Jacobson, and Yuanhui Zhang

This article is available at Iowa State University Digital Repository: https://lib.dr.iastate.edu/abe_eng_pubs/924

Quality Assured Measurements of Animal Building Emissions: Part 1. Gas Concentrations

Albert J. Heber, Ji-Qin Ni, and Teng T. Lim

Department of Agricultural and Biological Engineering, Purdue University, West Lafayette, Indiana

Amy M. Millmier

Food Science and Engineering Unit, University of Missouri, Columbia, Missouri

Jacek A. Koziel

Texas Agricultural Experiment Station, Texas A&M University, Amarillo, Texas

Pei-Chun Tao

Department of Agricultural and Biological Engineering, Purdue University, West Lafayette, Indiana (consider moving this entry to the top 3 authors)

David B. Beasley

Department of Biological and Agricultural Engineering, North Carolina State University, Raleigh, North Carolina

Steven J. Hoff

Department of Agricultural and Biosystems Engineering, Iowa State University, Ames, Iowa

Richard E. Nicolai

Department of Agricultural and Biosystems Engineering, South Dakota State University, Brookings, South Dakota.

Larry D. Jacobson

*Department of Biosystems and Agricultural Engineering, University of Minnesota, St. Paul, Minnesot*a

Yuanhui Zhang

Department of Agricultural and Biological Engineering, University of Illinois, Urbana, Illinois

ABSTRACT

Comprehensive field studies were initiated in 2002 to measure emissions of ammonia (NH_3), hydrogen sulfide (H_2S), carbon dioxide (CO_2), methane (CH_4), non-methane hydrocarbons (NMHC), particulate matter less than 10 microns diameter (PM_{10}), total suspended particulates (TSP), from swine and poultry production buildings in the U.S. This paper focuses on the quasi-continuous gas concentration measurement at identical locations in paired buildings in seven states. Documented principles used in air pollution monitoring at industrial sources were applied in developing EPA-based quality assurance project plans for these projects. Air was sampled from multiple locations with each gas analyzed with one high quality commercial analyzer located in an environmentally-controlled instrument shelter. A nominal 4.0-L/min gas sampling system was designed and constructed with Teflon wetted surfaces; bypass pumping, and flow and pressure sensors. Three-way solenoids were used to automatically switch between multiple gas sampling lines at 10-min or longer sampling intervals. Gas sampling probes were located inside buildings and 10 to 123 m away from the analyzers. Analyzers employed chemiluminescence, fluorescence, photoacoustic-infrared and photoionization detectors for NH_3, H_2S, CO_2, CH_4 and NMHC, respectively. Data were collected using PC-based data acquisition hardware and software. This paper discusses the methodology of gas concentration measurements and the unique challenges that livestock buildings pose for achieving desired accuracy and precision, data representativeness, comparability, and completeness, and instrument calibration and maintenance.

Key Words: Sampling, ammonia, hydrogen sulfide, volatile organic compounds, methane, quality control, animal housing, multi-state, continuous emission monitoring, emission factors.

IMPLICATIONS

The management of air pollutants is the next major manure management issue that U.S. agriculture face. Gas pollutants measurements discussed in this article are emitted by concentrated animal feeding operations (CAFOs) can create neighborhood nuisance, animal or human health concerns, or non-compliance with state or federal regulations. Currently, an assessment of the true impact of these pollutants is limited by the lack of reliable data on emission rates. The project goal is to determine baseline emission rates for six types of animal

confinement buildings and evaluate the differences in emissions due to geographical region, season of year, time of day, building design, growth cycle of the animals, and building management. Continuous emission and environmental measurements will be taken at each facility for fifteen months. To date, this study is the most comprehensive study of air quality in livestock buildings in the U.S. Information from this research will provide producers, technical assistance providers, regulators, and compilers of emission inventories with accurate information.

INTRODUCTION

Air pollutants emitted by livestock and poultry production operations represent potential risks to the health and well-being of herdsmen and livestock, to people in areas surrounding the facilities, and to the global environment.[1] Air pollutants of particular interest are ammonia (NH_3), hydrogen sulfide (H_2S), volatile organic compounds (VOC), and particulate matter (PM_{10} and TSP). Odor contributes to nuisance experienced in areas surrounding livestock facilities. Additionally, methane (CH_4) and carbon dioxide (CO_2) are considered to be important greenhouse gases.

Two collaborative multi-state emission studies of air pollutants from animal production were initiated in 2002. A six-state project entitled "Air Pollutant Emissions from Confined Animal Buildings" (APECAB) is quantifying and characterizing baseline emissions of NH_3, H_2S, odor, PM_{10}, and TSP from four swine building types and two poultry building types. The study is also evaluating influences of ventilation, animal mass, humidity, temperature, manure management, and climate and geographical characteristics on these emissions. A study entitled "Control of Air Pollutant Emissions from Swine Housing" (CAPESH) involves similar measurements at a fifth swine building type plus measurements of CH_4 and NMHC. The study includes evaluation of automatic soybean oil sprinkling and a fan plume obstruction and vertical deflection with a curtain.

The APECAB study is a collaboration of land-grant universities in six states (IN, IA, MN, IL, NC, TX) while the CAPESH study is being conducted by land-grant universities in two states (IN, MO). Both studies are utilizing common instrumentation and protocol. At each measurement site, a mobile instrument shelter is stationed between two identical or nearly identical, mechanically-ventilated, confined animal production buildings and emission

measurements are quasi-continuous. The instrument shelter houses a gas sampling system (GSS), gas analyzers, environmental instrumentation, a PC-based data acquisition system, controller units for real-time PM monitors, standard gas cylinders, and various supplies and equipment. Gas concentrations are measured extractively at the air inlets and outlets of each building while total building airflow is simultaneously monitored. Odor samples are collected approximately biweekly to determine odor emissions. Emission rates at any instant are calculated by multiplying concentration differences between ventilation inlets and outlets by building airflow rates:

$$E_i = Q_{air} \times \left(C_{i,exhaust} - C_{i,inlet}\right) \quad (1)$$

where: E_i = emission rate for gas "i", Q_{air} = ventilation rate through a building, $C_{i,exhaust}$ = concentration of gas "i" in the ventilation outlet, and $C_{i,inlet}$ = concentration of gas "i" in the ventilation inlet. A greater emphasis is being placed on data quality to maximize confidence, credibility and comparability of these measurements as compared with previous studies. A test duration of 15 months allows annual emission factors to be fully characterized. Long-term measurements allow assessment of variations caused by seasonal effects, animal growth cycles, diurnal variations, and waste management practices. The purpose of this four-part series is to describe how well-established principles of quality assurance and quality control (QAQC) were applied to emission measurements at livestock buildings to develop a common protocol for both studies. Parts 1-4 address gas concentrations, particulate matter concentrations, odor concentrations, and building airflow rate, respectively.

BACKGROUND

Field measurement of gas concentrations and emissions at commercial livestock buildings has been addressed previously.[2] A ranking exercise was conducted on all possible approaches to measuring ammonia. To reflect scientific, practical and financial considerations, the approaches were ranked according to quick turn-around, usefulness to houses and waste storage, meteorological flexibility, procedural ease, operating costs, capital costs, repeatability, bias, time resolution, required operator skill, and range of detection.[2] The stated desired accuracy was ±5% for concentration and ±5% for airflow. The selection of sampling time and location for livestock buildings is not straightforward but is very important for obtaining representative gas concentrations for emission determinations. The building ventilation exhaust is the most

appropriate sampling location for emission measurements in negative-pressure mechanically-ventilated barns. Relatively accurate gas emission rates can be estimated since the ventilation rate can also be measured at the exhaust(s).[3-5] Sampling time and frequency should be designed to cover diurnal and seasonal swings in concentrations.[6] The sampling frequency utilized with automatic multipoint systems depends on the number of locations and the response time of the measurement system.

Measurement of gas concentrations at livestock buildings is subject to several sources of potential errors (Table 1). However, very little information about QAQC (calibration of measurement systems, assessment of precision and bias) has been provided in most studies of livestock building air quality.[6] This has occurred because data quality has not received enough attention in past studies primarily due to lack of QAQC requirements by research sponsors and therefore by the researchers themselves. However, this scenario is changing with greater funding of emission studies by sponsors requiring QAQC documentation.

A 12-month field test of emissions at 8 swine finishing buildings was conducted utilizing one set of unattended continuous analyzers per building pair to measure gas concentrations in multiple air sample streams that were pneumatically-switched on 10- to 15-min sampling intervals through Teflon sampling tubes with a PC.[3] Multiple filtered air streams in the building (sample location group) were combined into single air streams pumped to the analyzers for concentration measurement. The maximum residence time in the 6-L/min gas sampling system was 45 sec. Analyzers located in environmentally-controlled instrument shelters were calibrated weekly by full-time field engineers. Some of the 62 building-months of emission data collected is published.[7-13]

Recommendations to improve gas emission data in future studies were as follows:[3] develop a detailed quality assurance project plan; maintain air sampling tubes 3 ºC above sampled air temperature; replace gas line filters on fixed schedules; over-design equipment protection against damage and corrosion; monitor space heater operation; select low-maintenance equipment and sensors; and provide remote access to on-line data.

EXPERIMENTAL METHODS

Description of Buildings

Some characteristics of the buildings monitored in the APECAB and CAPESH studies are described in Table 2. The Missouri and Indiana sites will be discussed in this paper in greater detail as examples of a swine finish and hen-laying housing, respectively. Each swine building at the Missouri site (Figure 1) has two rows of 24 pens with a center alley. Manure is collected in four shallow gutters; each gutter is flushed four times daily with recycled lagoon liquid. Ventilation air typically enters the attic through the eaves and into the room through passive gravity-operated ceiling air inlets. The buildings are tunnel ventilated during warm weather in summer with air entering through openings in the sidewall curtains near the east end of the building. The operation of the flushing valve and space heater operations are monitored as process control variables that affect emissions.

The Indiana site consists of two caged-hen laying houses at a 16-building complex. Each building has ten, 177-m long rows of cages in the 3.29-m high second floor. Manure is scraped off boards under the cages into the 3.15 m high first floor. Manure drying on the first floor is enhanced with 918-mm dia. auxiliary circulation fans. Incoming air flows through 2.7-m high evaporative cooling pads in the roof of the attic. Fresh air then enters the second floor through temperature-adjusted baffled ceiling air inlets. The number of belted exhaust fans operating in stages 1-8 are 5, 10, 18, 26, 35, 42, 56 and 75, respectively. In stage 9, the water flow of the evaporative cooling system is activated and the 19 fans turned on for stage 8 are shut off.

Figure **Error! Reference source not found.** shows a schematic of the monitoring plan for the two buildings. Each exhaust location is sampled individually via one tube whose end is located about 0.5 m directly in front of the fan at the same height as the fan hub. The air inlet and animal exposure SLGs each consist of three sampling lines (or laterals) connected in parallel to a mixing manifold. Each lateral samples from a location in the middle of each of three lengths of the building. The end of each lateral tube for the air inlet SLG is located in the attic about 10 cm above the baffled ceiling opening. The end of each lateral for the animal exposure SLG is located in an emptied cage that is about 0.75 m above the 15-cm wide manure slot through which ventilation air enters the pit.

The Texas site consists of two swine finishing houses at a 5-barn complex. The pigs are confined to 54 pens per building located on both sides of a narrow central walkway. The typical growing cycle lasts approximately 20 wks. Each building is 72.1 m long by 12.6 m wide. Waste is collected in the shallow pit that is drained weekly by discharging to an on-site earthen basin. The pit bottom is recharged with fresh water or water from the lagoon, depending on the basin level. In the summer, buildings are tunnel-ventilated. The inlet ventilation air enters via two side curtains at the short side of the building. In the winter, air enters via the attic and the 20 ceiling diffusers evenly spaced over the entire length of the house over the pens. Wintertime heating is aided by two natural gas heaters per building. Summertime cooling is aided by a misting system consisting of approximately 60 nozzles evenly distributed on both side walls. Five fans exhaust air from the building. Sampling lines are located at the inlet curtain, inlet diffusers, exhaust fans (2), and 1/3 and 2/3 of the length of each building. The thermocouples at the 1/3 length also monitors the operation of space heaters. The Texas, Missouri and Iowa sites are very similar except for the mode of waste handling. For all sites (Table 2), the collaborating producer records mortalities, animal inventory and weight, water and nutrient consumption, and the occurrence of special activities, e.g., generator tests, manure removals or agitation, changes in diet and animal health, temperature set points, ventilation interventions, building cleaning, and power failures.

Approach to Gas Concentration Measurements

Sampling group location groups consist of multiple tubes that bring air into a mixing manifold from multiple sampling points.[3] Samples from multiple locations can be acquired via one gas sampling line by making composites with a mixing manifold, e.g. four pit exhaust fans, five end wall tunnel fans, etc.[3] However, there are several reasons for having individual sampling points as compared with a mixed stream from several points. If one of the fans fail, then all the data need not be invalidated. In some cases, all exhaust points will not be at continuously operating fans. At others, multiple fans may have different capacities. Individual concentrations can be averaged while having the additional information of individual exhaust point characteristics. If mixed, only the mean value is known and the contributions of each point are unknown. In these studies, there are 1 to 4 exhaust SLG, 1 to 2 ventilation inlet SLG, and an animal exposure

location SLG (Figs. 1 and 2). For example, the animal exposure SLG consists of two or three tubes that bring air into a mixing manifold from representative sampling points.

The allocation of the sampling SLGs to each building depended on site specific building configurations. The number of inlet or background SLG ranges from one for both buildings (CAPESH site) to two per building (APECAB site). The reason for multiple exhaust locations was to enhance the representativeness of the exhaust concentration for emission calculations because of spatial variation. Since there are multiple exhaust points in a building, it is not advisable to use the concentration measured at one fan and the airflow of another fan to calculate emission rate of both fans if the fans are separated by a large distance or if one fan is in a manure pit and the other is in the wall. If the fans are grouped together, e.g. tunnel ventilation, a single point may be representative of air exhausting from any fan (e.g., Fig. 1). The number of exhaust SLG ranges from 2 to 4 among APECAB barns whereas the CAPESH barns only have only one exhaust measuring SLG.

A gas sampling system (GSS) in the environmentally-controlled instrument shelter draws continuous gas samples from each GSL and air from each GSL is sampled and measured continuously for one sampling period before switching to the next GSL. Thus, the use of a 10-min sampling period for 6 to 12 locations results in 12 to 24 sampling periods per day per location. The sampling sequence should be randomized to minimize possible systematic bias due to residue from the previous sample.[14] The first 7 to 9 min of gas concentration data are ignored to allow all gas analyzer outputs to stabilize. To ascertain that a 7- to 9-min purge will achieve a 90% minimum response to a step input, the response time of the system can be tested by attaching a 50-L bag of calibration gas at the end of the longest sampling tube. Hourly sampling of exhaust air is sufficient to capture variations in emissions.[14] Although the APECAB project is using a 1-hr to 2-hrs sampling cycle, there are 2 to 4 exhaust locations in each building thus exhaust concentrations in each barn are sampled 24 to 96 times daily.

A compromise to hourly sampling of exhaust air was necessary in the CAPESH study. After initially using a 10-min sampling period, large peaks in H_2S and CH_4 were observed in corresponding to 2-min flushes occurring in the manure pit at 30-min intervals. Based on the need to capture at least one complete rise and fall of flush-induced gas concentration, the sampling period was increased to 60 min for the exhaust SLG. The sampling period for ambient

air was increased to 20 min because slow stabilization of the NH_3 analyzer output to ambient concentrations was sometimes observed.

The duration of samples at a given SLG can be calculated as the total number of samples times the number of readings per sample. The sampling time ranges from 24 × 3 min = 72 min (1/20 of the day) to 12 × 1 min = 12 min (1/120th of the day). Although this seems like a very small percentage, it is the frequency of sampling compared with the frequency of the measured variable that is important, not the total duration of sampling. The 12, 60-sec samples are distributed throughout the day, thus capturing the diurnal variations of emissions.

GAS SAMPLING

Gas Sampling System

The gas sampling systems (GSS, Figure **Error! Reference source not found.**) located in the instrument shelter for both projects were designed and constructed by Purdue University. An array of 12, 3-way solenoid valves (S1-S12) (Part #648T032, Neptune Research, West Caldwell, NJ) in the GSS facilitates automatic sequential gas sampling from multiple locations through 10 to 123 m long FEP Teflon tubes (6.4 mm ID) at 4-5 L/min. A 47-mm dia., in-line Teflon PFA filter holder (Part 6-47-6, Savillex Corporation, Minnetonka, MN) housing a 47-mm dia., Teflon PTFE-laminated polypropylene membrane filter (Part U-02916-64, Cole-Parmer, Vernon Hills, IL) with 0.45 μm pore size was installed at the sampling probe to remove airborne particulates from sampled air. The filters are replaced at least biweekly.

The selected gas stream flows sequentially from the sample probe via tubes through a 3-way solenoid valve, a manifold (M2), a Teflon-lined diaphragm pump (P2) (Part 107CAB18-TFEL, Combined Fluid Products, Lake Zurich, IL), a mass flow meter, a flow restrictor, and a sampling manifold (M3) from which internal or external pumps of the gas analyzers draw air through a short (<3 m) 3.2 mm I.D., 6.4 mm O.D. tube. Manifold M2 and the solenoids are connected together with 22 to 38 cm long, 6.4 mm I.D., 9.5 mm O.D. tubes. All tubes, solenoids and fittings are Teflon. Odor samples are collected through a bag fill port. Bypass pump P1 draws air from all inactive (unsampled) sampling tubes via 3-way solenoid valves and manifold M1 at about 1.0 L/min per tube. Bypass pumping should reduce the response time of gas analysis by at least the residence time in the tubes, e.g. 38 sec for a 100 m long tube at 5 L/min. The GSS

unit (Figure 3) allows for automated calibration of all analyzers using an optional standard gas manifold module. The operation of solenoid valves in this calibration module can be activated remotely via the Labview software.

A 0-6895 Pa differential static pressure sensor (Model 2301001PD2F11B, SETRA, Inc., Boxborough, MA) and a stainless-steel lined 0-10 L/min mass flow meter (Model 50S-10, McMillan Company, Georgetown, TX) were used to provide a permanent QA record of the negative pressure and volumetric flow in sampling manifold M2 for each SLG. The resulting real-time display of sampling airflow and pressure facilitates troubleshooting the GSS. A low negative pressure in manifold M2 could mean sampling pump failure or deterioration, air leaks in the system, or ice formation in GSS exhaust hoses outside the instrument shelter. A high negative pressure could result from overloading of filters with PM or condensate in sampling lines. The control system could be programmed to shut off the gas sampling pump in case of abnormal readings.

The mass flow meter and the manifold pressure sensor have been extremely useful in assuring proper GSS operation (Figure 11). Abnormal M2 pressure has indicated leaks following a filter change (low vacuum) and blockage due to condensation in gas tubing (high vacuum). Leaks in the GSS were tested with an external system (Figure 11). To test for leakage, all solenoids are shut off from manifold M2 and pump P2 is turned off. Bypass pump P1 can be either on or off during the test. Pump P4 is operated to produce airflow as recorded by the rotameter, and the system is airtight if zero airflow is indicated. The empty jar dampens pump-induced vibrations. Items tested include the pump P2, manifold M2, the mass flow meter, the flow restrictors, the solenoids and all the fittings and tubing that connect these devices. Leaks were often found in the solenoids, and the fittings, too, so tests should be done during setup and on a regular basis thereafter, e.g. bimonthly.

Gas Transfer Tubes

Gas sampling tubes transferring relatively warm moist air must be maintained above the dew point temperature of sampled air at all times. Condensation control and prevention is critical, because many gases of interest, e.g., NH_3, H_2S, and CO_2, partition to water resulting in erroneous estimates of measured concentrations. Thus, the capability of accurate concentration

measurements with expensive analyzers is in vain if large errors are introduced by condensation. Condensation occur inside tubes at temperatures only a few degrees cooler than air sampled. For example, air at a typical condition of 20ºC and 70% humidity will condense at 14.4°C. Sometimes, indoor humidity and temperature are higher, for example 25ºC and 80% at which condensation will occur if the sampling line is cooled to less than or equal to 21.3ºC. The assumption of well-mixed ventilated space with uniform temperature throughout the space is invalid in a typical livestock building. Many planned and unplanned entries of cold outside air into the building, and cold inside surfaces produce a treacherous minefield for unheated sampling lines in these buildings. The trouble spots include air inlets distributed along the walls and ceiling, leaks through fan backdraft shutters, around doors, windows, and curtains, and through holes in the building envelope created by rodents and building damage and deterioration. Raceway entrances into the barn and into the instrument shelter are points of potential condensation as well as the instrument trailer itself. An electric-powered filtered, positive pressure HVAC system in the instrument shelter (to keep pollutants out) must maintain inside temperature within instruments' operating range and above the dew point of air being sampled to prevent condensation in exposed unheated tubes, especially during the winter when inside relative humidity is high. Cool air from the HVAC system must be directed away from unheated tubing. Shelter temperature should be recorded. The obvious minimum precaution involves heating the bundle of gas tubes in an insulated raceway between the barn and the instrument shelter. The most reliable and risk-free protection involves heating the entire length of all sampling lines, but this can be prohibitively expensive with systems that have a multiplicity of long tubes (Table 2). The strategy taken in these studies was to run the lines through the warmest path between inside air sampling locations and the raceway to the instrument shelter, avoiding cold spots as much as possible.

The gas sampling plan in the APECAB project consists of 10 to 115 m long FEP Teflon tubes (6.4 mm I.D. × 9.5 mm O.D.) that run from the GSS in the instrument shelter to various sampling locations in the barns (fan exhausts, ventilation inlets, animal zones). Heated sampling tubes are used to prevent condensation where tubes might be exposed to cold ambient air. The APECAB project sites typically use self-regulated heat tape (typically 49 W/m nominal) that is controlled either by the PC or a thermostat. One option is to power the heat tape continually since it is self regulated. However, the CAPESH site uses a non-regulated, custom-built, heat

tape (39 W/m) wrapped around each tube individually. A capillary tube thermostat protects the circuit from overheating (Figure 5) and a backup thermostat ensures heating in case of PC failure. An autotransformer is also used to reduce the potential heating capacity of an oversized heating system.

Gas Sampling Time

The sampling time is critical for obtaining quality data. On the one hand, with multipoint sampling, it is most desirable to move through the cycle quickly to sample all locations within a short interval. On the other hand, the analyzers must equilibrate and moving too quickly to analyzing the next location may create a systematic bias to all the data, because analyzers do not have sufficient time to output the actual concentration. Tradeoffs with respect to the response times of the analyzers should be considered when choosing the sampling period, and are dependent on the slowest analyzer. The average of multiple sequential valid readings (one or more) following equilibrium of the analyzer within a sampling period is reported as the concentration for that sampling period. A 10-min sampling period is being used in the APECAB study, but the decision about sampling period is site specific. For example, the sampling period was changed to 60 min in the CAPESH study because waste gutters in the barns are flushed every 30 min for 2 min causing a pronounced peak of H_2S and CH_4. A 60-min cycle would capture at least one full peak whereas a 10-min cycle with a 9-min equilibrium time would have missed them most of the time. More time is required for the NH_3 analyzer to decrease to a low reading, e.g. zero, as compared with the time required to increase to a high reading, e.g. span gas. Thus, a 20-min sampling period is used for the background or background sample in the CAPESH study and the majority of the APECAB sites. Net emissions could be underestimated if ambient samples are biased high due to short sampling periods.

GAS ANALYZERS AND CONCENTRATION MEASUREMENT

Ammonia

Ammonia is measured in real time with a chemiluminescence-based NH_3 analyzer (Model 17C, Thermal Environmental Instruments (TEI), Franklin, MA). It is a combination NH_3 converter and a nitrogen oxides analyzer that is typically used for ambient monitoring but has a range of 1

ppb to 200 ppm, i.e., capable of measuring the typical concentrations inside animal buildings.[3,15] Besides having an appropriate range for source measurements, the chemiluminescence method was chosen for its stability, reliability, and high precision (0.5% of full scale). The analyzer's full scale is adjusted between 20-200 ppm, depending on maximum levels expected at the building. If NO and NO_2 measurements are negligible, the analyzer is operated in the total nitrogen (N_t) mode to decrease response time and costs of NH_3 scrubber replacements.

Figure 6 shows a 24-hr record of NH_3 concentrations measured at the CAPESH site. Concentrations measured at these barns typically range from 5 to 35 ppm in exhaust air and less than 0.3 ppm in the ambient air. During the 20-min ambient sampling period, concentrations sometimes decrease even during the last 10 min of each cycle. The relatively long time to completely desorb the previous ammonia sample to zero or near zero concentration is common with chemiluminescence-based ammonia analyzers. The sharp NH_3 concentration decrease at midday is caused by higher airflow.

Hydrogen Sulfide

Hydrogen sulfide is measured in real time with a pulsed fluorescence-based SO_2 detector (TEI Model 45C) (U.S. EPA. Method EQSA-0486-060) following conversion of the H_2S to SO_2 by a converter (TEI Model 340). The SO_2 analyzer has a range of 0.01 to 10 ppm, a response time of 60 sec with a 10 sec averaging time, a sample flow rate of 0.5 L/min, a guaranteed precision of 1% of reading or 1 ppb (whichever is greater) and a data averaging time of 60 s. Further details are given elsewhere.[3] Figure 7 provides an example of H_2S measurement. Sharp peaks in H_2S up to 1,100 ppb were observed during flushing of under-floor manure gutters using effluent from an anaerobic lagoon. This observation of dynamic changes in concentration is due to a process-related event is a good illustration of the benefit of real-time vs. integrated sampling. The sharp H_2S concentration decrease at midday is caused by higher airflow.

Carbon Dioxide

Concentrations of CO_2 are measured using 2,000-ppm and 10,000-ppm photoacoustic infrared-based CO_2 analyzers (Model 3600, Mine Safety Appliances, Pittsburg, PA). Whereas the

CAPESH site has one 10,000-ppm analyzer, the APECAB study uses an additional 2,000-ppm analyzer to increase the sensitivity of measurements in the lower concentration range. The sensor utilizes dual frequency photoacoustic infrared absorption and is corrected for water vapor content. The guaranteed precision of this analyzer is ±2% of full scale and the sample flow rate is about 1.0 L/min. A bubbler is needed in-line from the calibration cylinder to add the needed moisture for stable operation of the analyzer during calibration. The sharp CO_2 concentration decrease at midday is caused by higher airflow. Carbon dioxide concentrations measured at the CAPESH site on November 8, 2002. The 60 and 20 indicate the sampling periods in minutes.

Methane and Total Non-Methane Hydrocarbon Analysis

The CH_4 and the total NMHC concentrations are determined in real-time using a back-flush GC system with a flame ionization detector (TEI Model 55C) in accordance with U.S. EPA Reference Method 25. It is an automated batch analyzer that repeatedly collects and analyzes small amounts of the sample stream drawn in by the pump. The instrument has a sensitivity of 75.1 $\mu g/m^3$ of NMHC as propane. The CH_4/NMHC analyzer uses a two-point calibration that utilizes a zero and a span. Zero readings are taken at times when no hydrocarbons are expected to elute from the column during the span gas calibration. The analyzer can be programmed for automatic calibrations, e.g. 7:30 a.m. daily at the CAPESH site by connecting a span gas to the analyzer's internal calibration circuit. If the NMHC compound used in calibration is hexane and other compounds are measured, instrument readings will not be a direct measurement of concentration in ppm. This problem can be addressed by expressing concentrations in ppmc rather than ppm. The concentration in ppmc is calculated by multiplying the concentration in ppm by the number of carbon atoms per molecule in the span gas. A response factor is a linear coefficient that adjusts the instrument reading according to an experimentally determined relationship between the calibration gas and the compound being sampled.

Figures 9 and 10 show 24-hr records of CH_4 and NMHC concentrations from the CAPESH site, respectively. The CH_4 concentrations ranged from about 5 to 60 ppm in exhaust air and were highly correlated with flushing events. Ambient concentrations and were less than 3 ppm. Relatively low concentrations are expected in a building with frequent flushing of manure. The NMHC concentrations ranged from 10 to 300 ppbc with an unexplained peak of 1,100 ppbc

in Barn 7. Automatic calibration of the analyzer with 2.03 ppmc hexane occurred at 7:30 a.m. To avoid possible interference from oxygen, the methane span concentration should never be less than about 1.5 ppm. And to obtain good calibration repeatability, the concentration of NMHC concentrations may be above 0.5 ppmc. As a general rule, the instrument is accurate to ± 2% at sample concentrations ranging between 20% and 120% of the span concentrations.

Quality Assurance and Quality Control

Calibration of analyzers assures data quality and provides information about characteristics of the devices, such as response, drift, linearity, stability, and precision. For example, the difference between known NH_3 concentrations and NH_3 analyzer outputs guides the adjustment of system hardware or software, or the correction of concentration data during data processing.[3,16] During calibrations, gas analyzers operate in their normal sampling mode, and calibration gas passes through as much of the sample probe and sample-handling system as is practicable.[18] It is not always practicable to calibrate the instrument by introducing calibration gases directly into a remote sampling probe.[18] The measurement system in this study includes the analyzer, an external GSS, and an array of long sampling lines with filtered probes on the end of each line. A schematic of an NH_3 measurement system, Figure 11, shows that calibration gases can be introduced into this measurement system at points A, B, C or D.

To determine analyzer performance, a multipoint calibration of the gas analyzers is conducted at A in triplicate using either a series of gas cylinders, or with a precision gas mixing and dynamic dilution system (Model 4040, Environics, Inc., Tolland, CT) to provide a series of concentrations that spans the expected range of the target analyte. The calibrations are conducted at the beginning of the project and following long interruptions in service or analyzer malfunction. The maximum gas concentration in the series is preferably between 70 and 200% of expected concentration levels. Alternatively, the calibration gas can be introduced at points B, C or D for the calibrations. However, more calibration gas is required because the flow rate of the external gas sampling system is 4.0 L/min as compared with 0.6 L/min. Multipoint calibration of the NH_3, H_2S, and CO2 analyzers and the least squares regression line are used to convert the analog output (VDC) of the analyzer to engineering units (ppb).

Routine zero and span checks are conducted every 1 to 7 d by introducing calibration gases into the probe manifold M2 (point B). The calibration gas introduced at B flows through

the GSS except for the solenoids that receive the gas from the sampling tubes (Figure 11). In the CAPESH study, a 5.0-L/min, 6-port diluter allows computer-controlled calibrations and programmable gas concentrations. A 6-port manifold directs the diluter output to point A, B, C or D. Figure 12 shows an example of zero and span checks of gas analyzers at point D at the Missouri site. A bubbler was not used during the calibration shown in Figure 12 causing a downward drift after equilibrium was attained.

Another calibration technique used in the APECAB project is the introduction of calibration gas into one of the sampling lines (Figure 11). This method requires one manual 3-way valve and a bubbler. The manual 3-way valve is placed in a sample line where it enters the instrument shelter before the solenoid. This 3-way valve either allows flow from the barn or from gas cylinders. The bubbler indicates adequate bypass flow and provides moisture needed for stable calibration of the CO_2 analyzer. Tubing is manually connected to the required gas cylinder. A bypass vent for excess flow is required in each case. The sample probe itself if the bypass for points C and D. With a diluter flow of 5 L/min and a sampling flow rate of 4 L/min, 1.0 L/min flows from the point of injection out through the sampling probe. The bypass flow is checked at the probe with a flow meter to verify sufficient bypass flow. At point B, one of the solenoids is opened to create a bypass back through a sampling line. A small manifold M4 is used for point A calibrations. To assist in data processing, a flag indicating calibration time is recorded by the data acquisition program. This flag activates when the DAQ software goes into the calibration mode, either automatically or manually. Bimonthly, in the APECAB project, a bag of calibration span gas and a bag of zero gas are manually introduced into the filtered end of a sampling tube (point D in Figure 11). The results are compared with calibration at point B. If the difference in span concentration between points B and D is more than 5%, then maintenance is needed to correct the problem.

The NH_3 analyzer is challenged with zero air, an NH_3 span gas (dual-certified by NIST-traceable gravimetric formulation and analysis based on vendor reference standard), and a NIST-traceable NO span gas. The NH_3 calibration is conducted every 1 to 7 d whereas the NO calibration is conducted every 1 to 3 mo as a maintenance check to calculate converter efficiency. The H_2S analyzer is challenged with zero air, a known concentration of H_2S span gas (weekly) and a known concentration of sulfur dioxide (SO_2) span gas (every 1 to 3 mo). The H_2S and SO_2 calibration gases are certified with NIST-traceable analyses. For the NMHC analysis,

selection of an appropriate calibration gas is critical for obtaining an accurate measure of the total NMHC. Because the response of the FID is different per unit mass of carbon, the response of the gas used to calibrate it should be as close as possible to the response of the NMHCs being measured. N-hexane (2.0 ppm) was selected as the most appropriate calibration gas in the CAPESH study. The CO_2 analyzer is challenged with zero air with 2.5% methane and a known concentration of NIST-traceable CO_2 span gas.

Gas Density Measurements

The temperature and humidity of exhaust air along with barometric pressure are needed for accurate volume correction to standard conditions. Copper-constantan thermocouples (Type T) are used to sense temperature at the exhaust sampling points. Thermocouples are calibrated before and after the 15 month collection period with spot checks of each sensor every three months using a constant-temperature bath. An electronic RH/temp transmitter (Model HMW61, Vaisala, Woburn, MA) housed in a NEMA 4 enclosure will monitor temperature and relative humidity at a representative exhaust location in each building. This RH/temp transmitter uses a HUMICAP sensor unit with ±2% accuracy between 0 and 90% RH and ±3% accuracy between 90 and 100% RH.

A water bath and two precision ASTM mercury-in-glass thermometers (-8 to 32 °C and 25 to 55 °C, 0.1 °C precision) is used for calibration with water baths. A salt calibrator kit (Model MK1520000A01000, Vaisala, Woburn, MA) is used to calibrate the capacitance-type rh/temp sensors prior to commencing the study, and every three months thereafter. A portable RH/temp probe (Model HMP46, Vaisala, Woburn, MA) with an indicator (Model HM141, Vaisala, Woburn, MA) is used as a NIST-transfer device to check the RH/temp transmitters and the thermocouples every three months. Atmospheric pressure is monitored with a barometric pressure transducer and compared with that measured by the nearest weather station.

CONCLUSIONS

Gas concentration measurements at animal buildings faces many technical and management challenges. A comprehensive measurement system described in this paper consists of sampling probes at different locations, an external gas sampling system, various measurement instruments, and a computer-based controller. Operation of such a system and each of its components are exposed to many sources of errors. Concentration calculation and conversion also depend on reliable temperature and pressure data. A quality assured gas concentration measurement is subject to limitations of currently available technologies, materials and budget. However, careful design of the system, selection of quality materials, and regular and effective maintenance and calibration minimizes the errors. Quality assurance and quality control throughout each stage of the research is critical for research management to achieve data quality objectives.

ACKNOWLEDGMENTS

Support from the U.S. Department of Agriculture, the U.S. Environmental Protection Agency, and Premium Standard Farms is acknowledged. The contributions of Rob Dobson, Sustainable Environmental Solutions, Bruce Harris, U.S.E.P.A., and Cary Secrest, U.S.E.P.A. are acknowledged for their contributions to the development of the quality assurance project plan.

ABBREVIATIONS AND ACRONYMS

APECAB = study entitled “Air Pollutant Emissions from Confined Animal Buildings”

CAPESH = study entitled “Control of Air Pollutant Emissions from Swine Housing”

CEM = continuous emission monitoring

FEP = grade of Teflon

GSS = gas sampling system

NMHCs = non-methane hydrocarbons

PFA = grade of Teflon

QA = quality assurance

QC = quality control

SLG = sampling location group

REFERENCES

1. National Research Council of the National Academies. Air Emissions from Animal Feeding Operations: Current Knowledge, Future Needs. Board on Agriculture and Natural Resources, Board on Environmental Studies and Toxicology, The National Academies Press, Washington, D.C. 2003.
2. Phillips, V. R.; Scholtens, R.; Lee, D. S.; Garland, J. A.; Sneath, R. W. A review of methods for measuring emission rates of ammonia from livestock buildings and slurry manure stores, Part 1: assessment of basic approaches. *J. Agric. Engng Res.* **2000**, *77*, 355-364.
3. Heber, A. J.; Ni, J. Q.; Haymore, B. L.; Duggirala, R. K.; Keener, K. M. Air quality and emission measurements methodology at swine finish buildings. *Transactions of the ASAE.* **2001**, *44*, 1765-1778.
4. Berckmans, D.; Ni, J. Q. Field test installation for on-line continuous measurement of total ammonia emission from animal houses. *In Proceedings of the International Conference for Agricultural Machinery & Process Engineering*: *Seoul, Korea, 1993*; Vol. 2, pp 393-402.
5. Hartung, E.; Jungbluth, T.; Büscher, W. Reduction of Ammonia and Odor Emissions from a Piggery with Biofilters. *Transactions of the ASAE.* **2001**, *44*, 113-118.
6. Ni, J. Q.; Heber, A. J. Sampling and measurement of ammonia concentrations at animal facilities – a review. *In Proceedings of the ASAE Annual Int. Meeting*; ASAE paper number 01-4090: Sacramento, California, 2001; pp 1-34.
7. Heber, A. J.; Duggirala, R. K.; Ni, J. Q.; Spence, M. L.; Haymore, B. L.; Adamchuk, V. I.; Bundy, D. S.; Sutton, A. L.; Kelly, D. T.; Keener, K. M. Manure treatment to reduce gas emissions from large swine houses. *In International Symposium on Ammonia and Odour Control from Animal Production Facilities*; Voermans, J. A. M., Monteny, G. J., Eds.; NVTL, PO-Box 83, 5240 AB Rosmalen, The Netherlands: Vinkeloord, The Netherlands, 1997; Vol. II, pp 449-458.
8. Heber, A. J.; Ni, J.-Q.; Haymore, B. L.; Duggirala, R. K.; Diehl, C. A.; Spence, M. L. Measurements of gas emissions from confined swine buildings. I*n Proceedings of ASAE Annual Int. Meeting*; ASAE paper number 98-4058: Orlando, Florida, 1998; pp 1-40.
9. Heber, A. J.; Ni, J. Q.; Lim, T. T.; Diehl, C. A.; Sutton, A. L.; Duggirala, R. K.; Haymore, B. L.; Kelly, D. T.; Adamchuk, V. I. Effects of manure additive on the reduction od

ammonia emissions from large swine finishing buildings. *Transactions of the ASAE*. **2000**, *43*, 1895-1902.

10. Lim, T. T.; Heber, A. J.; Ni, J.-Q.; Diehl, C. A. *In Proceedings of the ASAE/CSAE-SCGR Annual International Meeting*; ASAE paper number 99-4130: Toronto, Ontario Canada, 1999; pp 1-10.
11. Ni, J. Q.; Heber, A. J.; Diehl, C. A.; Lim, T. T. Ammonia, hydrogen sulfide, and carbon dioxide release from pig manure in under-floor dip pits. *J. Agric. Engng Res.* **2000**, *77*, 53-66.
12. Ni, J. Q.; Heber, A. J.; Lim, T. T.; Diehl, C. A.; Duggirala, R.; Haymore, B. L. Summertime concentrations and emissions of hydrogen sulfide at mechanically-ventilated swine finishing buildings. *Transactions of the ASAE*. **2002**, *45*, 193-199.
13. Ni, J. Q.; Heber, A. J.; Lim, T. T.; Diehl, C. A.; Duggirala, R. K.; Haymore, B. L.; Sutton, A. L. Ammonia emissions from a large mechanically-ventilated swine building during warm weather. *J. Environ. Qual.* **2000**, *29*, 751-758.
14. Hartung, E. In *ASAE Annual Int. Meeting*; ASAE paper number 02-4098: Chicago, Illinois, 2002.
15. Phillips, V. R.; Lee, D. S.; Scholtens, R.; Garland, J. A.; Sneath, R. W. A Review of Methods for measuring Emission Rates of Ammonia from Livestock Buildings and Slurry or Manure Stores, Part 2: monitoring Flux Rates, Concentrations and Airflow Rates. *J. Agric. Engng Res.* **2001**, *78*, 1-14.
16. van 't Klooster, C. E.; Heitlager, B. P. *Measurement systems for emissions of ammonia and other gasses at the Research Institute for Pig Husbandry*. Research Institute for Pig Husbandry, The Netherlands, 1992.
17. U.S. Environmental Protection Agency "Quality Assurance Handbook for Air Pollution Measurement Systems, Volume II: Part 1: Ambient Air Quality Monitoring Program Quality System Development," U.S. Environmental Protection Agency. Office of Air Quality Planning and Standards: Research Triangle Park, NC. 1998.
18. U.S. Environmental Protection Agency. Code of Federal Regulations, Title 40, Part 60, Appendix A. Method 25A: Determination of total gaseous organic concentrations using a flame ionization analyzer. US Government Printing Office, Washington, DC. 1997.

ABOUT THE AUTHORS

Dr. Albert J. Heber, Dr. Ji-Qin Ni, and Dr. Teng T. Lim are a professor, research associate, and postdoctoral fellow at the Purdue University, respectively. Dr. Amy Millmier is the Extension Assistant Professor at the University of Missouri. Dr. Jacek A. Koziel is an assistant professor at the Texas Agricultural Experiment Station. Pei-Chun Tao is a graduate student at Purdue University. Dr. David B. Beasley is a professor at the North Carolina State University. Dr. Steven Hoff is an associate professor at the Iowa State University. Dr. Larry D. Jacobson is a professor at the University of Minnesota. Dr. Yuanhui Zhang is an associate professor at the University of Illinois at Urbana Champaign. Drs. Heber and Jacobson serve as the APECAB project director and technical director, respectively. Dr. Heber serves as the CAPESH project director. More information about the APECAB project can be found at: http://manure.coafes.umn.edu/apecab/index.html.

Al….please check the titles and the info for accuracy.

TABLES

Table 1. Potential errors of gas concentration measurement inside livestock buildings and possible solutions.[5]

Sources of errors	Causes or Solutions
Diurnal variation	Repeated measurements over 24 hr
Seasonal variation	Long-period tests across seasons
Spatial variation	Sample at multiple locations
Adsorption and desorption	Reduce wetted surface areas. Use bypass pumping. Use Teflon.
Condensation in sample lines	Keep sample transfer lines above dew point temperature
Leaks in sampling system	Conduct leak tests and eliminate leaks
Dust in sampling system	Filter dust at sampling probe and sampling line inlet
Human operational errors during operation	Proper training, oversight and standard operating procedures, record keeping
Calibration gas	Select reliable gas provider, dual analysis, and internal checks
Calibration procedure	Input gas at sample probe in replicated multipoint calibrations
Poor sensitivity and precision	Proper calibration and maintenance
Poor frequency response	Proper selection, calibration and maintenance of analyzers
Interferences of other gases and particles	Analyzer selection and calibration, filtration of undesired gases
Operation of measurement	Human errors
Temperature data	Use accurate sensors. Conduct scheduled calibrations
Atmospheric pressure data	Use accurate sensors. Conduct scheduled calibrations
Data rounding	Increase resolution of recorded data

Adapted from Ni and Heber [5].

Table 2. Characteristics of test sites and buildings.

Location by state	MO	IN	MN	IL	IA	NC	TX
Livestock type	Swine finish	Hen layers	Swine gestation	Swine farrow	Swine finish	Broilers	Swine Finish
Inventory†	1,100	250,000	929/512	56	960	22,000	1,080
Average mass, kg	68	1.8	200	200	68	1.0	68
Animal occupation, d	140	365	1 wk	21	140	63	140
# buildings at site	8	16	2	2	4	4	5
Year of construction	1995	2002	1994/97	1997/98	1997	2001	2000
Building type	Flush	HR	PPR	PP	DP	litter	PPR
Orientation	E-W	N-S	N-S	N-S	E-W	NE-SW	E-W
Distance to site, km	94	69	160	96	29	120	160
Shower in/out?	Y	N	Y	Y	N	N	Y
Building width, m	13.2	30.5	14.6	18.0	12.5	12.8	12.7
Building length, m	61.0	181.4	77.4	22.5	58.5	152.4	72.0
Building area, m^2	806	5,613	1,133	405	2,400	1,952	910
Ridge height, m	4.6	11.6	4.9	7.6	4.6	3.2	4.6
Sidewall height, m	2.44	6.40	2.29	3.05	2.44	2.20	2.44
Building spacing, m	15.2	22.9	9.2	0	18.3	18.3	15.2
Manure storage, d	0.25	730	400	21	365	730	7
Outdoor storage	lagoon	none	basin	none*	none	none	lagoon
Number air inlets†	20	10	14	8	9	48	20
Inlet type	CCB	slot	CCB	CCB	CCB	slot/EP	CCB
Inlet control method	gravity	Δp	Δp	gravity	Δp	Δp	Δp
Controls vendor	JC	AE	AV	MF	VF	HH	AS
Number of fans†	5	75	6	4	8	13	5
# variable speed fans	1	0	1	2	4	0	2
Largest fan dia., cm	122	122	122	122	122	122	122
Smallest fan dia., cm	91	122	91	46	46	91	91
Fan manufacturer	AS	AT	AV	MF	MF	HH/DA	AS
# ventilation stages‡	5	9	6	4	7	7	5
# temperature sensors†	2	15	1	1	2	3	2
Artificial heating	Y	N	Y	Y	Y	Y	Y
Summer cooling	Mist/tun	EP	EP	EP/tun	SK/tun	EP/tun	Mist/tun
Number of inlet SLG†	0.5††	1	2	2	2	1/2	2
Number exhaust SLG†	1	4	2	2	3	4/5	2
No. emission streams	1	4	1	2	3	1/4	1
Gas probe lengths, m	13-37	12-115	67	10-50		15-123	23-107
Internet service type	DSL	wireless	WDSL	phone	phone	phone	satellite
Start date in 2002	8/28	12/1	8/28	11/15	8/15	11/25	10/10

*manure stored in deep pit of adjacent building
†per building or room
‡includes continuous winter fans as the first stage
††one sampling probe located between the buildings represents inlet air for both buildings
AE= Automated Environments, AS= Airstream, AT=Aerotech, AV=Aerovent, CCB=center-ceiling baffled inlet, DP=deep pit, EP=evaporative pad, Flush = shallow pit with recycle flush, HR=high rise, HH = Hired Hand, MF=Multifan, PP=Pull-plug manure pit, PPR=Pull-plug manure pit with recharge, SLG=sample location groups, SK=sprinkler system, tun=tunnel ventilation, VF=Varifan, WDSL = wireless DSL.

FIGURES

Figure 1. Site monitoring plan for 2 swine finish buildings at the CAPESH Missouri site.

Figure 2. Site monitoring plan for two laying houses in Indiana. Fan locations are approximate.

Figure 3. Schematic of gas sampling system showing calibration options.

Figure 4. Sample airflow and manifold pressure before and after maintenance.

Figure 5. Heat tape control circuit for maintaining temperatures of air sampling lines above dew point.

Figure 6. Ammonia concentrations measured at the CAPESH site.

Figure 7. Hydrogen sulfide concentrations measured at the CAPESH site.

Figure 8. Carbon dioxide concentrations measured at the CAPESH site on November 8, 2002.

Figure 9. A 24-hr record of methane concentrations at the CAPESH site.

Figure 10. A 24-hr record of VOC concentrations at the CAPESH site.

Figure 11. Potential calibration gas injection points (A, B, C and D) in NH_3 measurement system.

Figure 12. Remote zero/span checks of gas analyzers at point d in barn 8 at the capesh site**.**

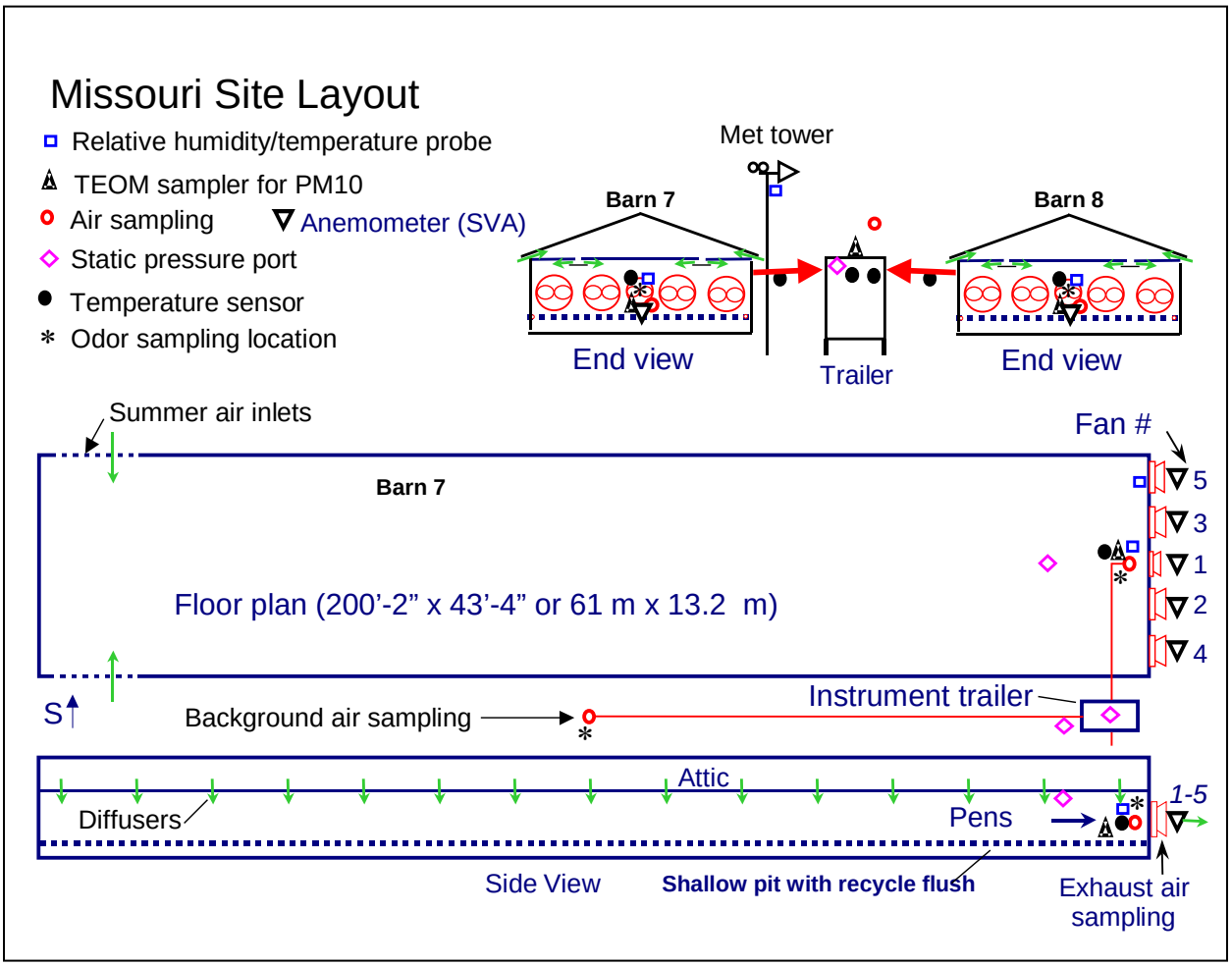

Figure 1. Site monitoring plan for 2 swine finish buildings at the CAPESH Missouri site.

AL…Please consider removing the "Missouri Site Layout"

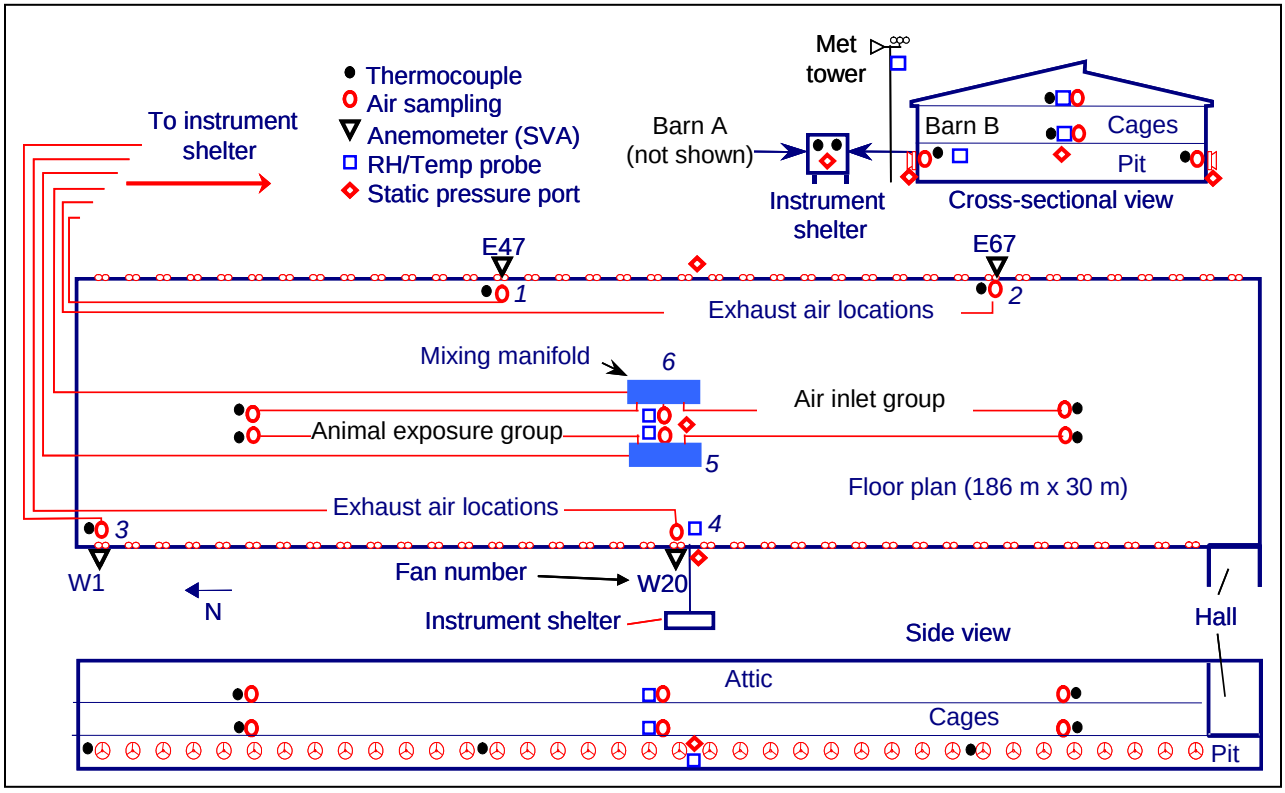

Figure 2. Site monitoring plan for two laying houses in Indiana. Fan locations are approximate.

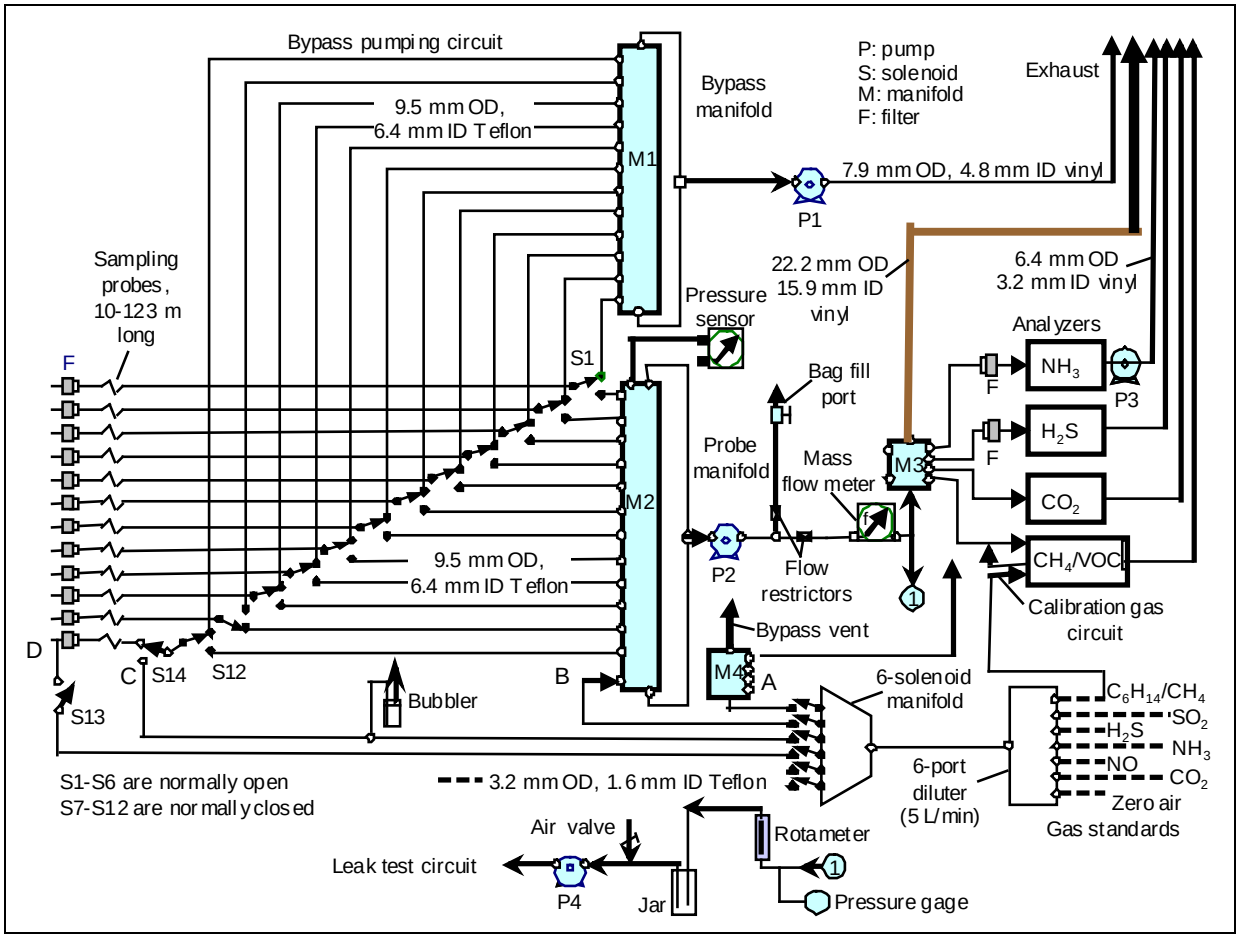

Figure 3. Schematic of gas sampling system showing calibration options.

Al…please consider changing “bag fill port” to “odor sample port” and adjusting the 2 lines elbows on the exhaust line.

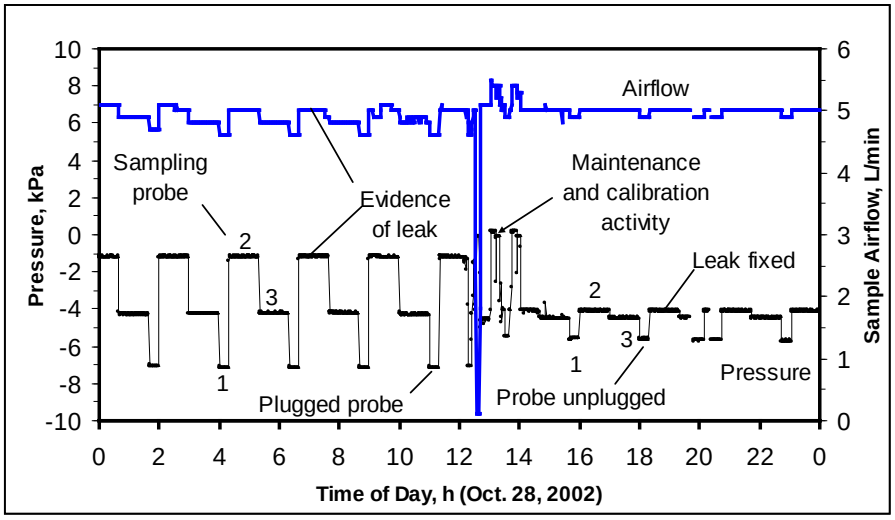

Figure 4. Sample airflow and manifold pressure before and after maintenance.

Al…please change “h” to “hr” in the legend for X axis.

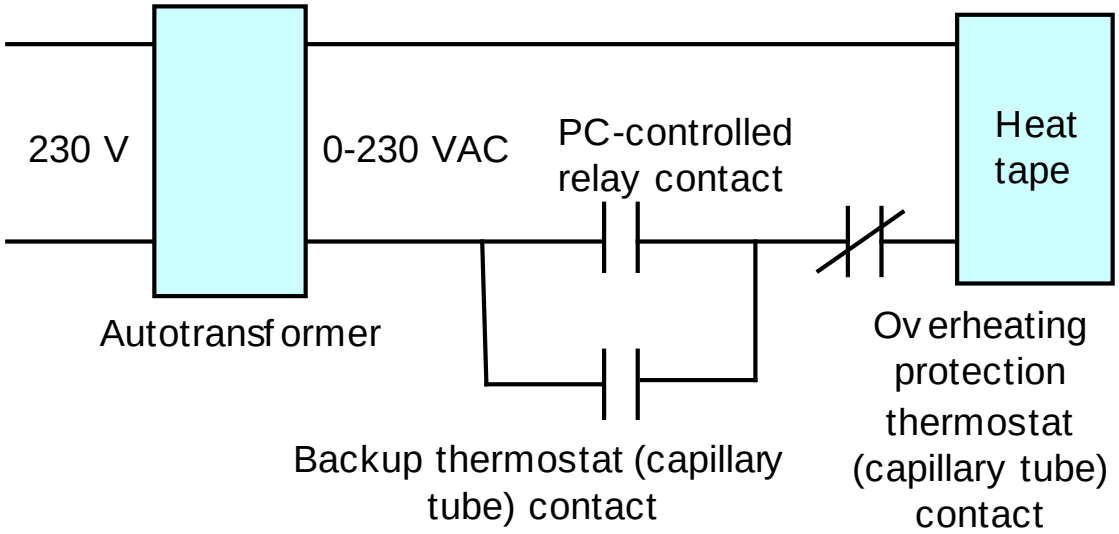

Figure 5. Heat tape control circuit for maintaining temperatures of air sampling lines above dew point.

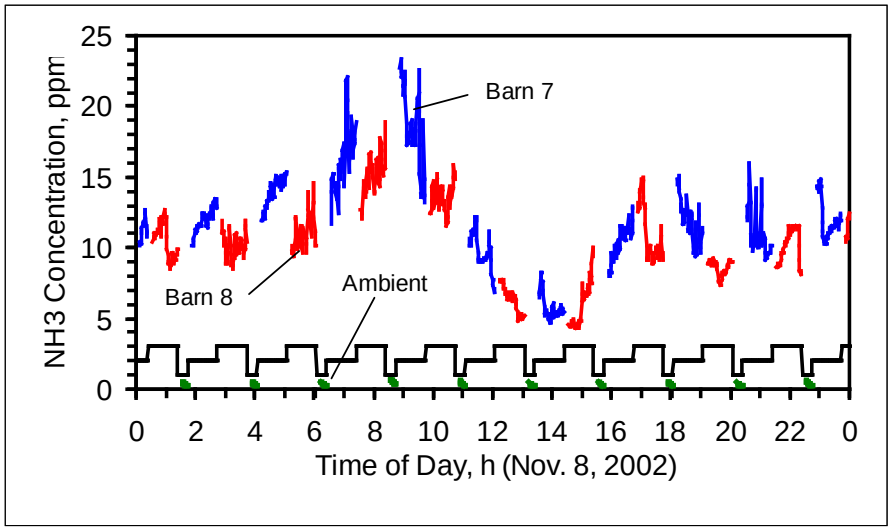

Figure 6. Ammonia concentrations measured at the CAPESH site.

Al…please change “h” to “hr” in the legend for X axis.

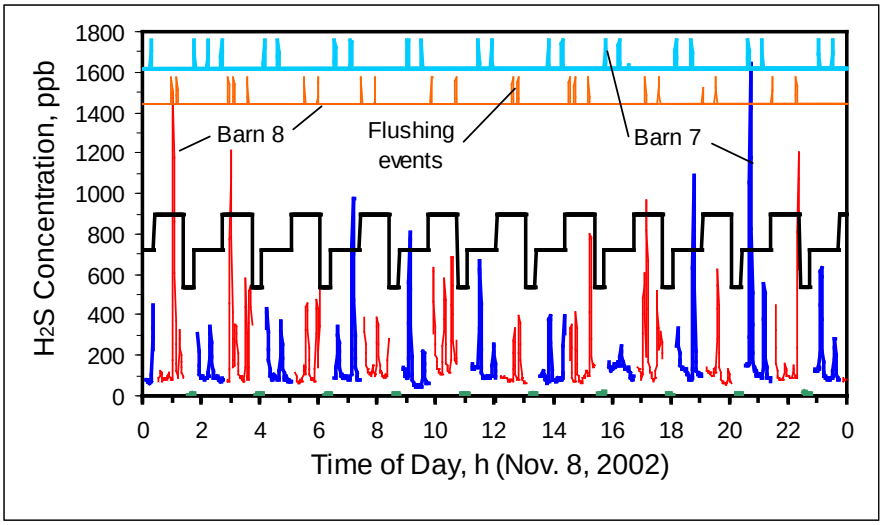

Figure 7. Hydrogen sulfide concentrations measured at the CAPESH site.

Al…please change “h” to “hr” in the legend for X axis.

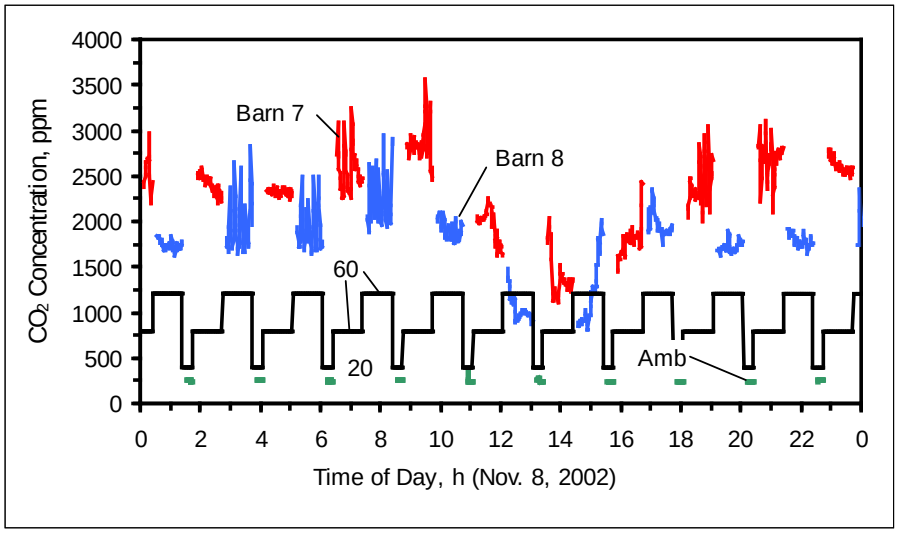

Figure 8. Carbon dioxide concentrations measured at the CAPESH site on November 8, 2002.

Al…please change “h” to “hr” in the legend for X axis.

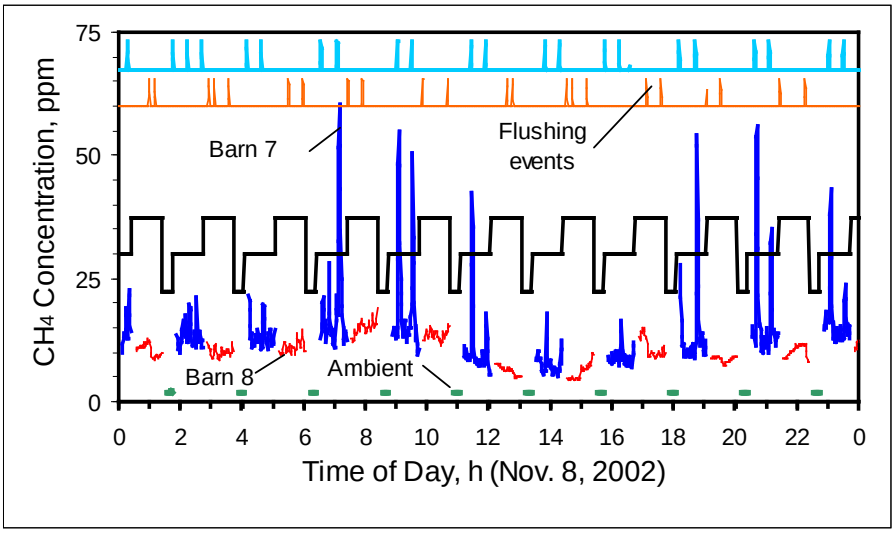

Figure 9. A 24-hr record of methane concentrations at the CAPESH site.

Al…please change “h” to “hr” in the legend for X axis.

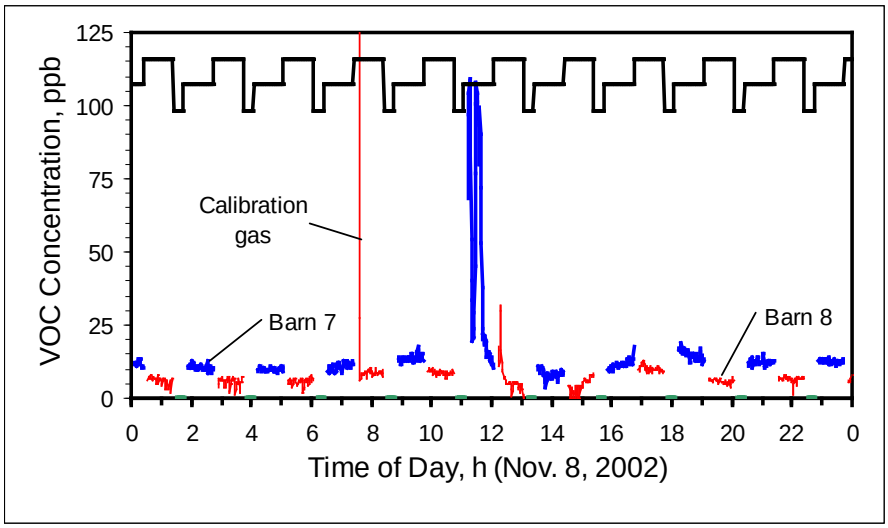

Figure 10. A 24-hr record of VOC concentrations at the CAPESH site.

Al…please change “h” to “hr” in the legend for X axis and change ppb to ppbc.

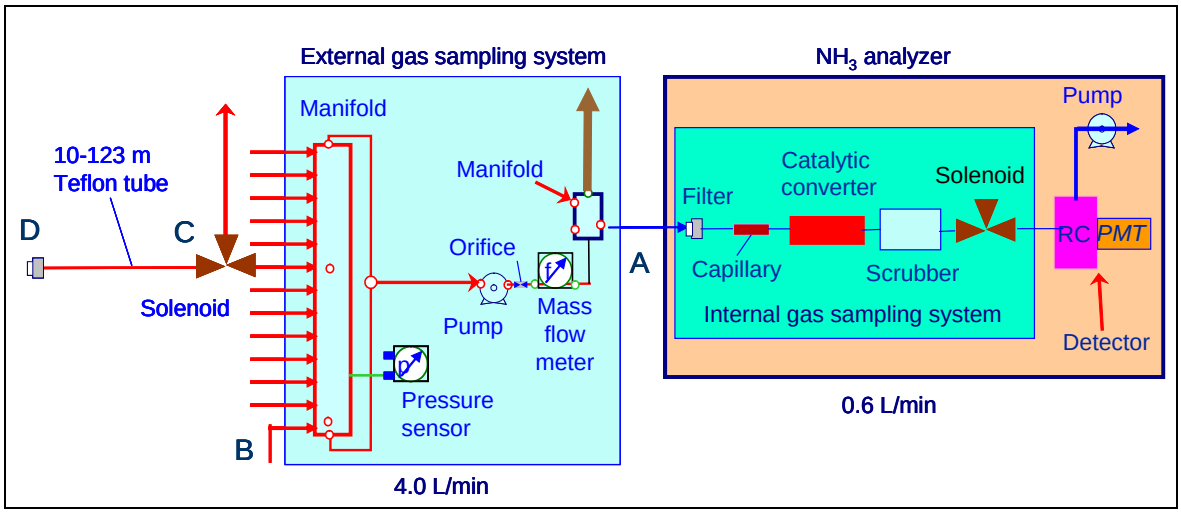

Figure 11. Potential calibration gas injection points (A, B, C and D) in NH_3 measurement system.

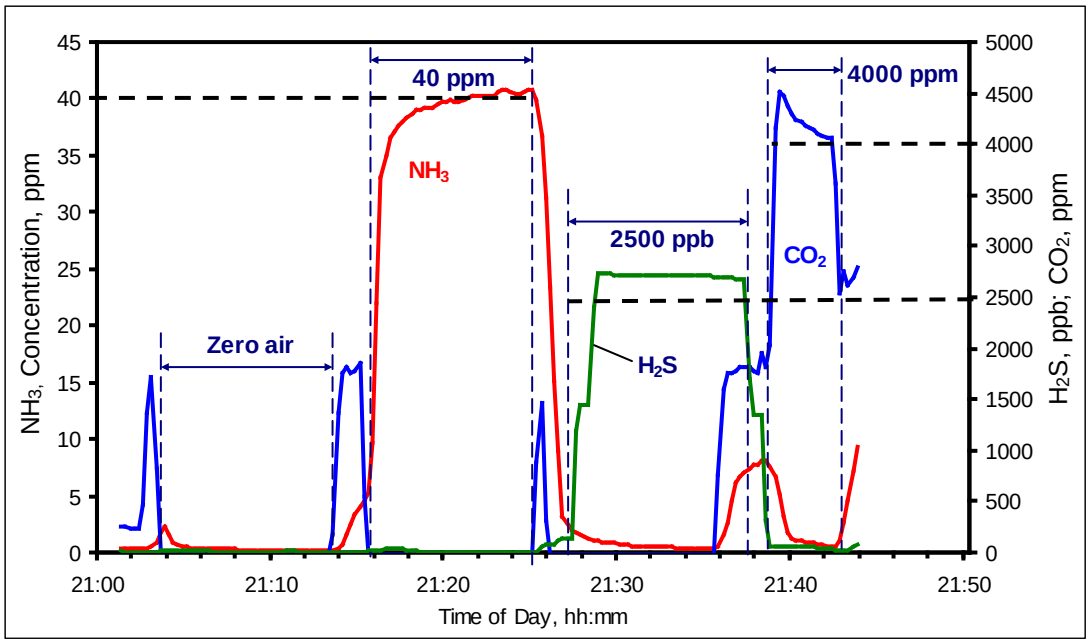

Figure 12. Remote zero/span checks of gas analyzers at point d in Barn 8 at the CAPESH site.